MUTUAL MOTOR

EC 离心風機

M133 Series

EC Centrifugal Fan Ø133 x 110 mm

AUTO RESTAR | PWM | FG | RD SIGNAL H | RD SIGNAL L

Impeller : Made of plastic ABS UL94 V-0

風 輪: ABS塑料制, 阻燃等级UL94 V-0

Frame : Made of die-cast Aluminum

外 框: 压铸铝合金

Motor : 8 Poles brushless DC motor

電 機: 8极无刷直流

Model (型号)	Bearing System (轴承)	Rated Voltage (电压) [VAC]	Voltage Range (电压范围) [VAC]	Freq. (频率) [Hz]	Input Power (功率) [W]	Speed (转速) [RPM]	Maximum Air Flow (风量) [CFM]	Maximum Air Flow (风量) [m³/h]	Max. Static Pressure (静压) [InH₂O]	Max. Static Pressure (静压) [Pa]	Niose Level (噪音) [dB-A]	Mass (质量) [g]
M133HE2	Ball	220	100~240	50/60	43	4480	155.5	264.4	1.87	466	67	800

Air Flow and Static Pressure

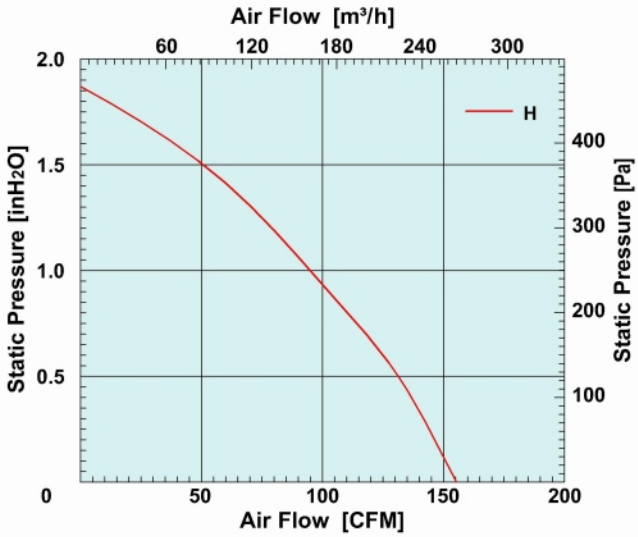

Dimensions Drawing

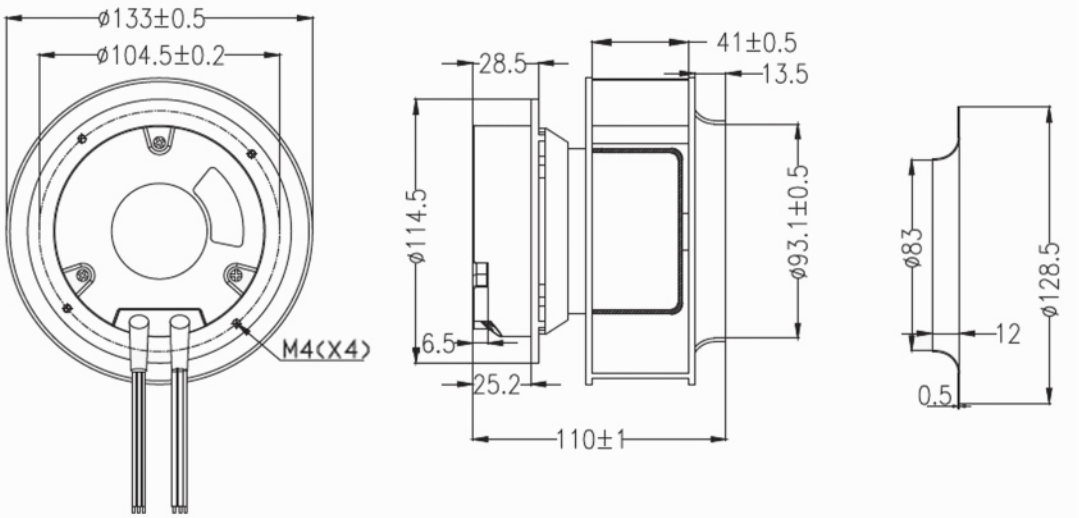

Above specification is only for reference and subject to change without notice.

以上数据仅供参考，如有变更恕不另行通知。

www.mutualmotor.com